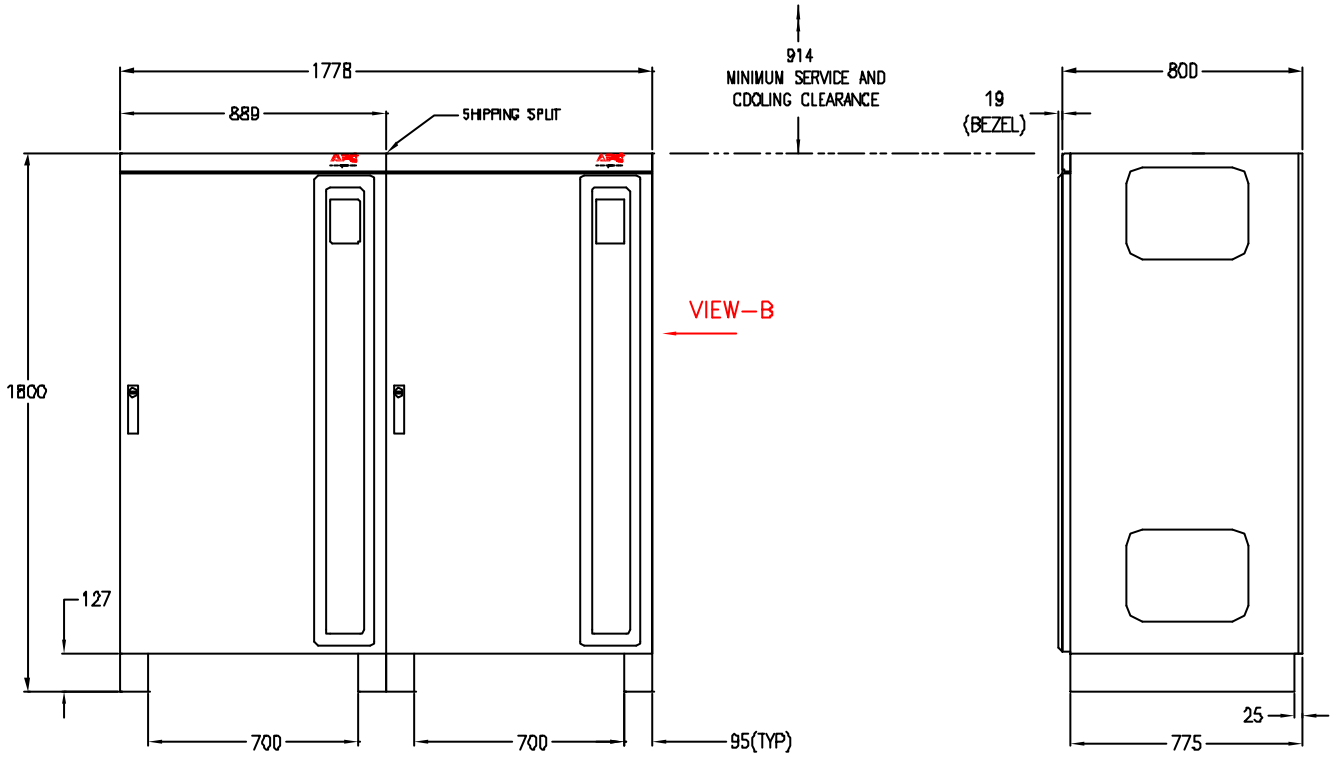

FRONT VIEW

VIEW–B
(RIGHT SIDE VIEW)

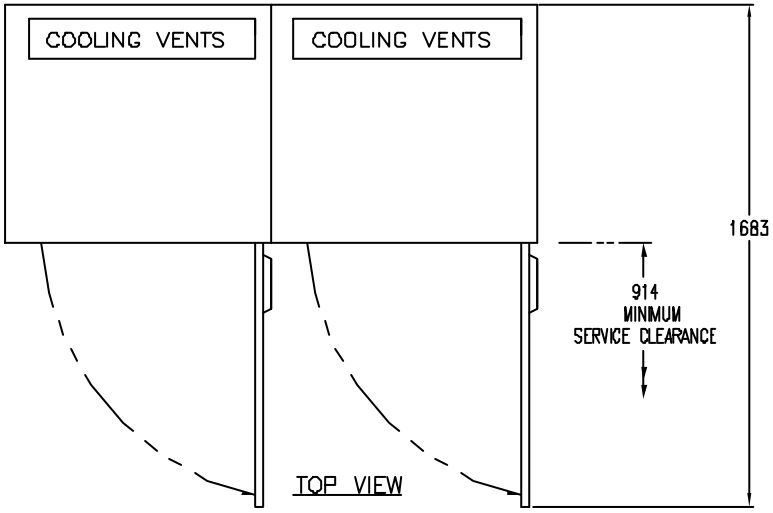

TOP VIEW

NOTES:
1. ALL DIMENSIONS ARE IN MILLIMETERS.
2. MINIMUM COOLING AND SERVICE CLEARANCE IS 914 mm.
3. UNIT WEIGHT IS 3177 kg.
4. XR CABINETS ARE SHIPPED WITHOUT SIDE PANELS.
5. INSTALLATION MUST COMPLY WITH ALL APPLICABLE NATIONAL AND LOCAL CODES.

THIS DRAWING AND SPECIFICATIONS HEREIN ARE THE PROPERTY OF AMERICAN POWER CONVERSION AND SHALL NOT BE COPIED, REPRODUCED OR USED IN WHOLE OR IN PART, AS THE BASIS FOR THE MANUFACTURE OR SALE OF ITEMS WITHOUT WRITTEN PERMISSION FROM APC. THIS DRAWING IS BASED UPON LATEST AVAILABLE INFORMATION AND IS SUBJECT TO CHANGE WITHOUT NOTICE.

TITLE: SILCON UPS 480kW BATTERY CABINET, MECHANICAL (HXR5-2C STYLE) 480kW, 400V	DWG NO: SLB480KHXR5-2C-MM		REV: –	
	DRAWN: Nagendra.K	25/07/01	SCALE: 1:1	
	CHECKED: N.Leperd	25/07/01	PROJECTION	
PROJECT: SUBMITTAL DRAWINGS SHEET 1 OF 1	ENGINEER: P.Francis	25/07/01		

AMERICAN POWER CONVERSION
132 FAIRGROUNDS RD
WEST KINGSTON, RI 02892