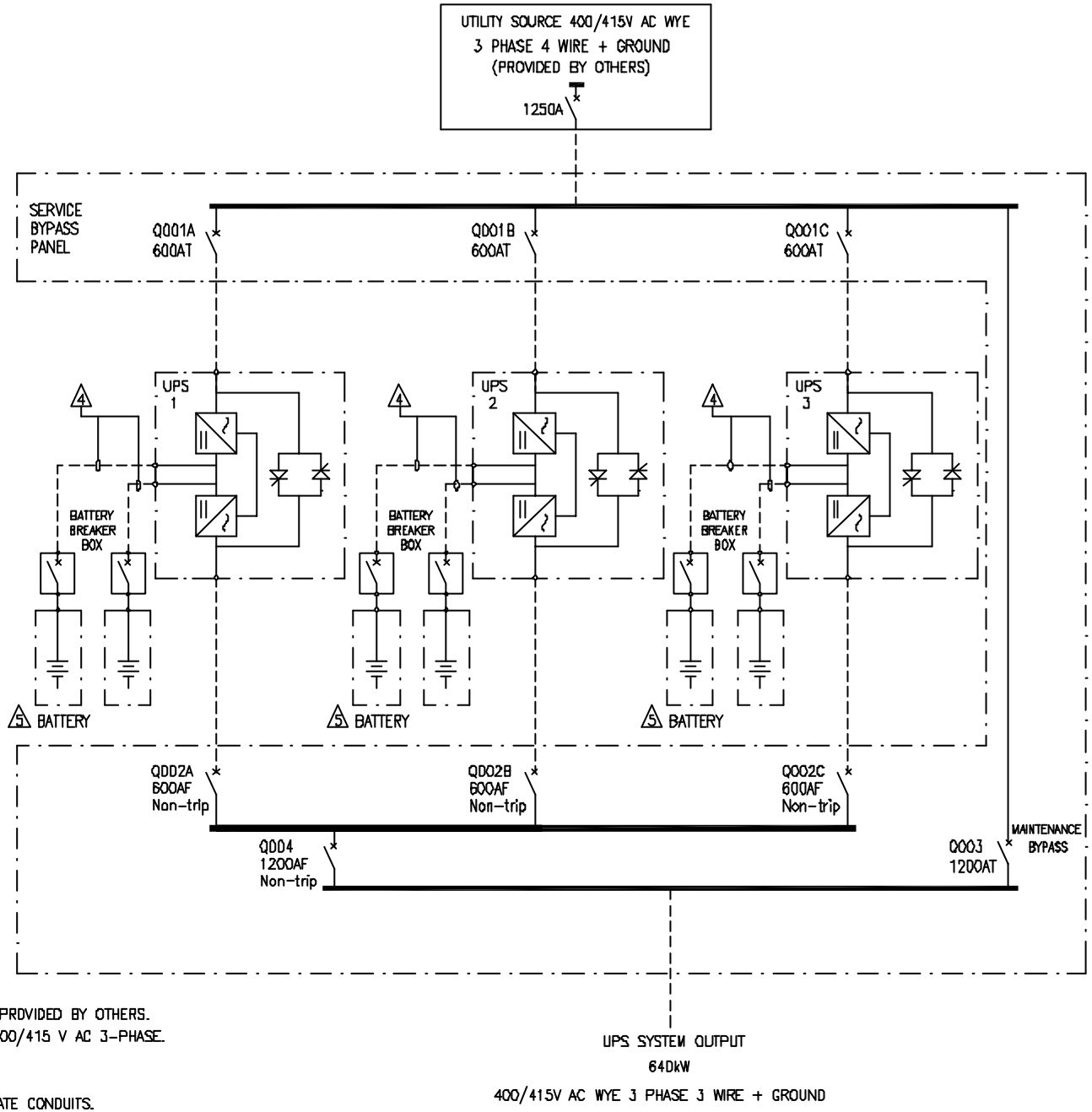

NOTES:

1. PLEASE REFER TO APC INSTALLATION GUIDE.
2. UTILITY SOURCE MUST BE WYE 3 PHASE 4 WIRE + GROUND PROVIDED BY OTHERS.
3. ALL AC OUTPUT CABLING FROM UPS IS 3 WIRE + GROUND 400/415 V AC 3-PHASE.
4. △ DC CABLING SHOULD BE SEGREGATED FROM AC CABLING.
5. △ SEE BATTERY INSTALLATION INFORMATION.
6. UPS OUTPUT CABLES AND INPUT CABLES MUST BE IN SEPARATE CONDUITS.
7. POWER WIRING AND CONTROL WIRING SHOULD BE IN SEPARATE CONDUITS.
8. AC CIRCUIT CABLE LENGTHS (INPUT AND OUTPUT) SHOULD BE EQUAL ON ALL MODULES.
9. DC CIRCUIT CABLE LENGTHS SHOULD BE EQUAL ON ALL MODULES.
10. - - - - - - - - - = CABLING PROVIDED BY OTHERS.
11. INSTALLATION MUST COMPLY WITH NATIONAL AND LOCAL CODES.

THIS DRAWING AND SPECIFICATIONS HEREIN ARE THE PROPERTY OF AMERICAN POWER CONVERSION AND SHALL NOT BE COPIED, REPRODUCED OR USED IN WHOLE OR IN PART, AS THE BASIS FOR THE MANUFACTURE OR SALE OF ITEMS WITHOUT WRITTEN PERMISSION FROM APC. THIS DRAWING IS BASED UPON LATEST AVAILABLE INFORMATION AND IS SUBJECT TO CHANGE WITHOUT NOTICE.

TITLE: SILCON 320kW UPS SYSTEM ONE LINE DIAGRAM 320kW, 400/415V AC 3MOD N+1	DWG NO: SLJ320KHR3-SD		REV: –
	DRAWN: C.KRISHNAMOORTHY	17/10/01	SCALE: NTS
	CHECKED: MILIND S/ K KATO	17/10/01	PROJECTION
PROJECT: SUBMITTAL DRAWING SHEET 1 OF 1	ENGINEER: S WACH	17/10/01	

AMERICAN POWER CONVERSION
132 FAIRGROUNDS RD
WEST KINGSTON, RI 02892